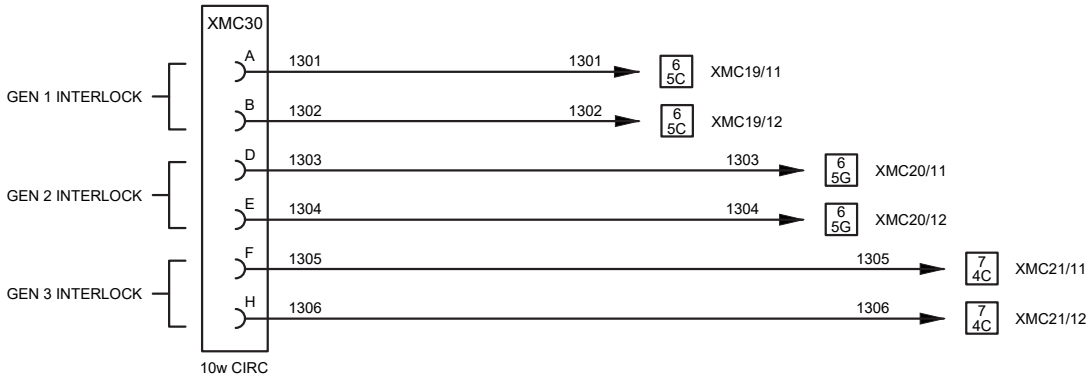

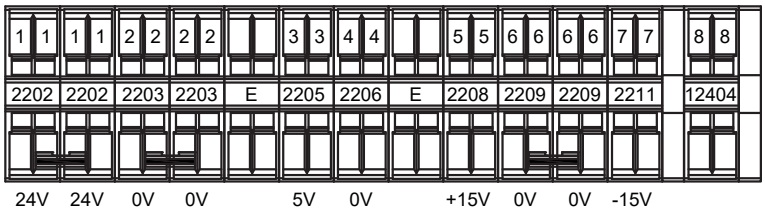

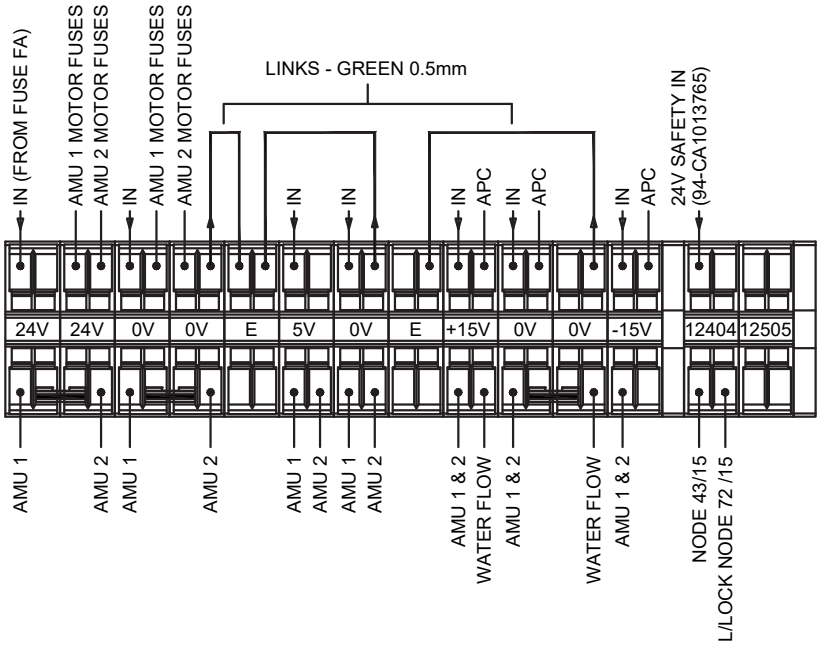

XMT1 DETAIL

Issue	Date	ECN	Modification	Zone	Drawn	Checked
3	24/03/15	105078	REMOVE NODE 34, NOW AN OPTIONAL MODULE	8.G2	JEG	JED
2	11/12/14	104481	AS BUILT CHANGES		AFP	LRM
1	23-9-14	103729	INITIAL ISSUE		AFP	LRM

THIS DRAWING BELONGS TO OXFORD INSTRUMENTS PLASMA TECHNOLOGY Ltd. AND IS ISSUED ON CONDITION THAT IT IS NOT COPIED, PRINTED OR DISCLOSED EITHER WHOLLY OR IN PART TO A THIRD PARTY WITHOUT PRIOR CONSENT IN WRITING FROM OXFORD INSTRUMENTS PLASMA TECHNOLOGY Ltd. NORTH END, YATTON, BRISTOL. BS49 4AP. ENGLAND

ALL ENQUIRIES :-
ptdesign@oxinst.com

OXFORD INSTRUMENTS

PLASMA TECHNOLOGY

TITLE
PLC UNIT WIRING SCHEMATIC

NGPD

DRAWING No.
94-ES1012078

DRAWN	CHECKED	DATE	ISSUE
AFP	LRM	01-05-14	

SHEET 4 OF 8

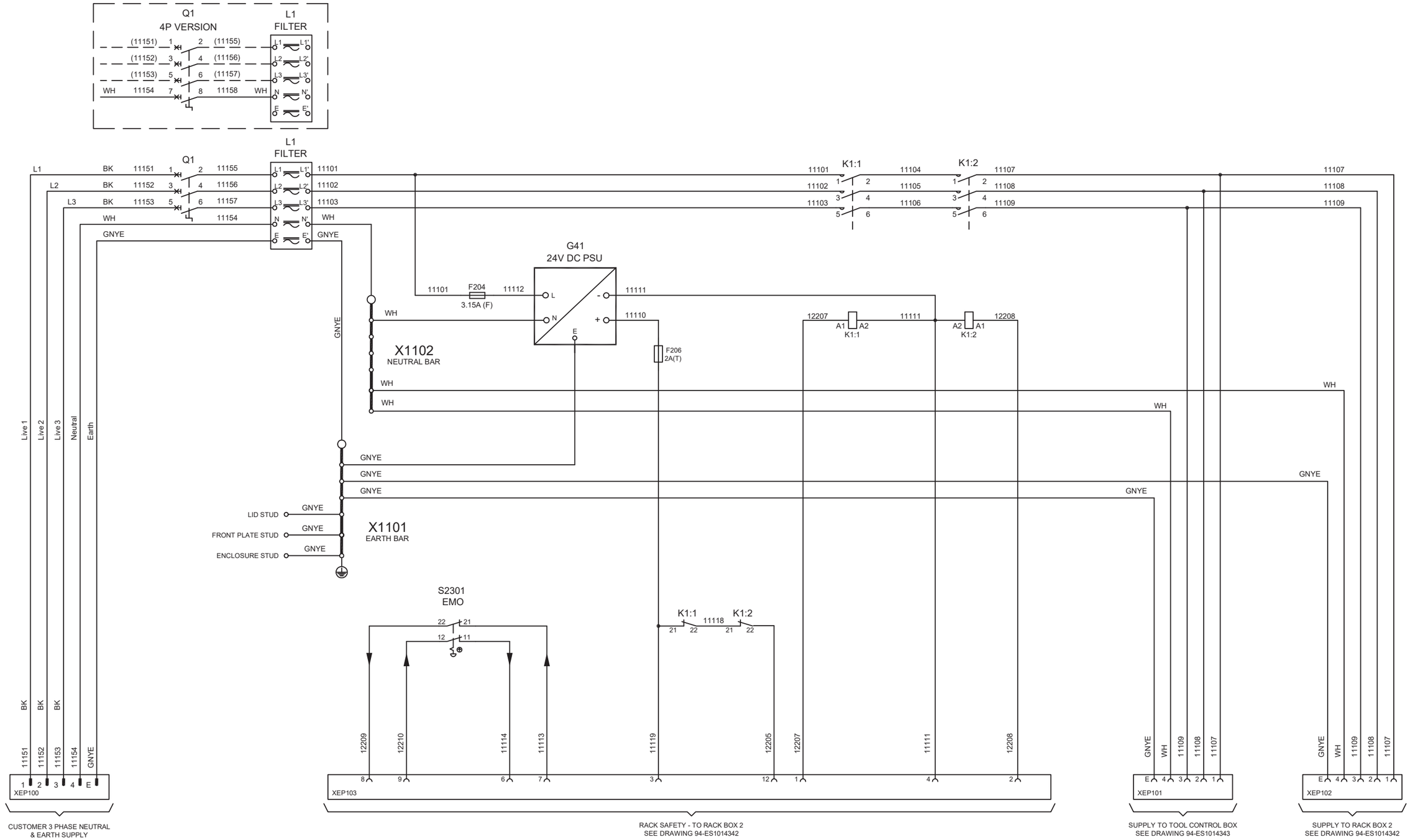

NOTES

1. REFER TO WIRING SCHEDULE 94-ED1016706 FOR WIRE SIZES & DETAILS.
2. FUSE/CIRCUIT BREAKER VALUES & TYPES ARE NOMINAL ONLY. FOR EXACT DETAILS & REQUIRED OPTIONS REFER TO THE RELEVANT SYSTEM CONFIGURED BOM.
3. WIRE COLOURS
   BLACK = AC 230/400V
   BLUE = DC
   WHITE = NEUTRAL
   GNYE = EARTH

Issue	Date	ECN	Modification	Zone	Drawn	Checked
2	16.04.15	105187	FUSE F206 CHANGED TO 2A	3C	DJW	JEG
1	29.01.15	104757	FIRST ISSUE	-	LRM	AFP

TOLERANCES UNLESS STATED
X ±0.5mm X.XX ±0.1mm
X.X ±0.3mm ANGLE ±0° 15'

SCALE NTS UNLESS STATED
DIMS mm UNLESS STATED

ALL ENQUIRIES :- ptdesign@oxinst.com

THIRD ANGLE PROJECTION

THIS DRAWING BELONGS TO OXFORD INSTRUMENTS PLASMA TECHNOLOGY Ltd. AND IS ISSUED ON CONDITION THAT IT IS NOT COPIED, PRINTED OR DISCLOSED EITHER WHOLLY OR IN PART TO A THIRD PARTY WITHOUT PRIOR CONSENT IN WRITING FROM OXFORD INSTRUMENTS PLASMA TECHNOLOGY Ltd. NORTH END, YATTON, BRISTOL. BS49 4AP. ENGLAND

OXFORD INSTRUMENTS

PLASMA TECHNOLOGY

TITLE
RACK BOX 1 WIRING SHEMATIC

NGPD

DRAWING No. 94-ES1014341

DRAWN	CHECKED	DATE	ISSUE
LRM	AFP	29/01/2015	2

SHEET 1 OF 1

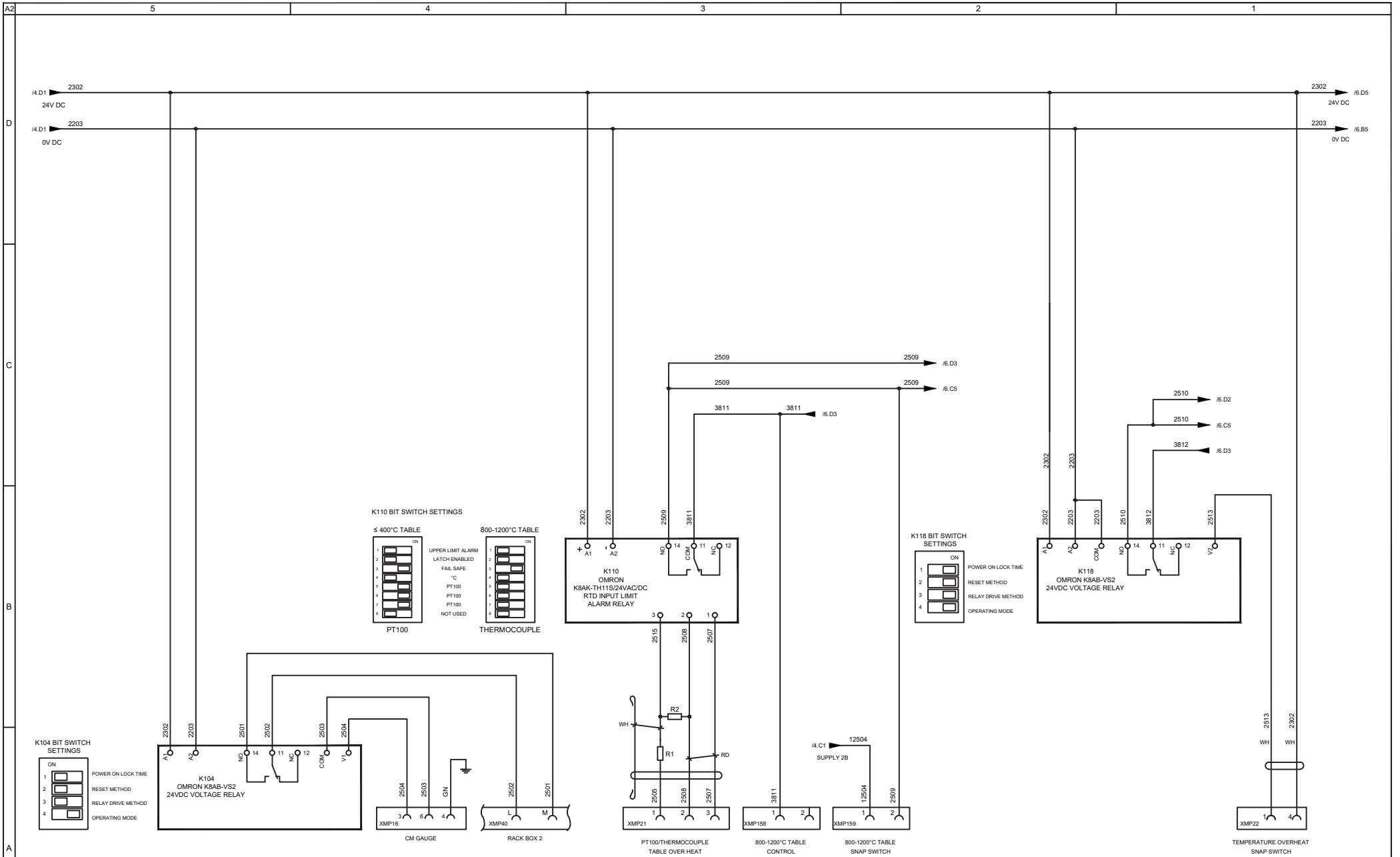

Issue	Date	ECN	Modification	Zone	Drawn	Checked
1	29.01.15	104759	FIRST ISSUE	-	LRM	AFP

TOLERANCES UNLESS STATED
X ±0.5mm X.XX ±0.1mm
X.X ±0.3mm ANGLE ±0° 15'

SCALE: NTS UNLESS STATED
DIMS: mm UNLESS STATED

ALL ENQUIRIES :- ptdesign@oxinst.com

THIRD ANGLE PROJECTION

THIS DRAWING BELONGS TO OXFORD INSTRUMENTS PLASMA TECHNOLOGY LTD. AND IS ISSUED ON CONDITION THAT IT IS NOT COPIED, PRINTED OR DISCLOSED EITHER WHOLLY OR IN PART TO A THIRD PARTY WITHOUT PRIOR CONSENT IN WRITING FROM OXFORD INSTRUMENTS PLASMA TECHNOLOGY LTD. NORTH END, YATTON, BRISTOL, BS49 4AP, ENGLAND

OXFORD INSTRUMENTS

PLASMA TECHNOLOGY

TITLE: TOOL CONTROL BOX (TCB)

WIRING SCHEMATIC - NGPD

DRAWING No. 94-ES1014343

DRAWN	CHECKED	DATE	ISSUE
LRM	AFP	29/01/2015	1

SHEET 5 OF 7

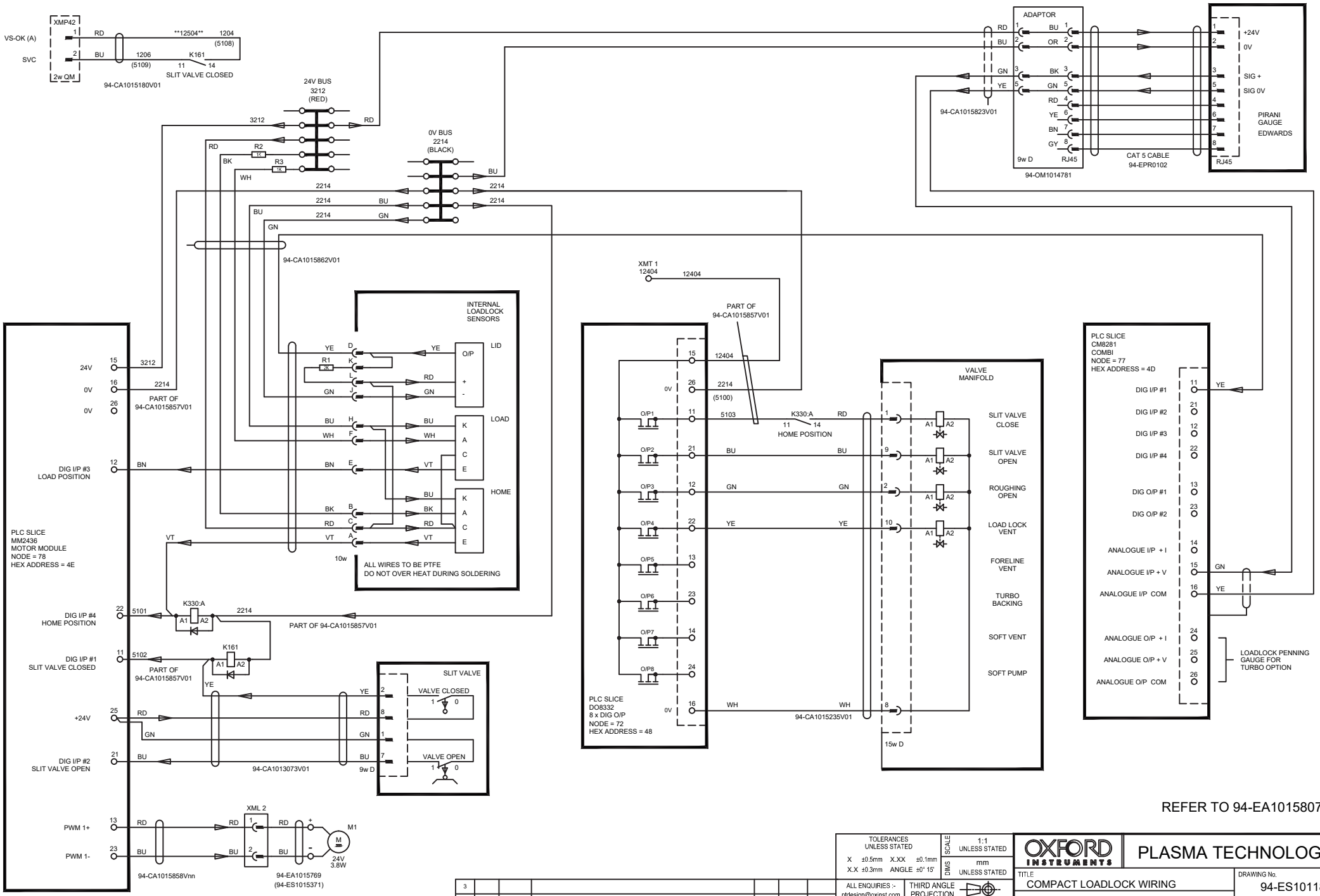

REFER TO 94-EA1015807

Issue	Date	ECN	Modification	Zone	Drawn	Checked
3						
2						
1	6-10-14	104061	INITIAL ISSUE		AFP	LRM

TOLERANCES UNLESS STATED
X ±0.5mm X.XX ±0.1mm
X.X ±0.3mm ANGLE ±0° 15'

SCALE 1:1 UNLESS STATED
DIMS mm UNLESS STATED

ALL ENQUIRIES :- ptdesign@oxinst.com

THIRD ANGLE PROJECTION

THIS DRAWING BELONGS TO OXFORD INSTRUMENTS PLASMA TECHNOLOGY Ltd. AND IS ISSUED ON CONDITION THAT IT IS NOT COPIED, PRINTED OR DISCLOSED EITHER WHOLLY OR IN PART TO A THIRD PARTY WITHOUT PRIOR CONSENT IN WRITING FROM OXFORD INSTRUMENTS PLASMA TECHNOLOGY Ltd. NORTH END, YATTON, BRISTOL, BS49 4AP, ENGLAND

OXFORD INSTRUMENTS

PLASMA TECHNOLOGY

TITLE
COMPACT LOADLOCK WIRING

SCHEMATIC - NGPD

DRAWING No. 94-ES1011828

DRAWN	CHECKED	DATE	ISSUE
AFP	LRM	31/3/14	1

SHEET 1 OF 1

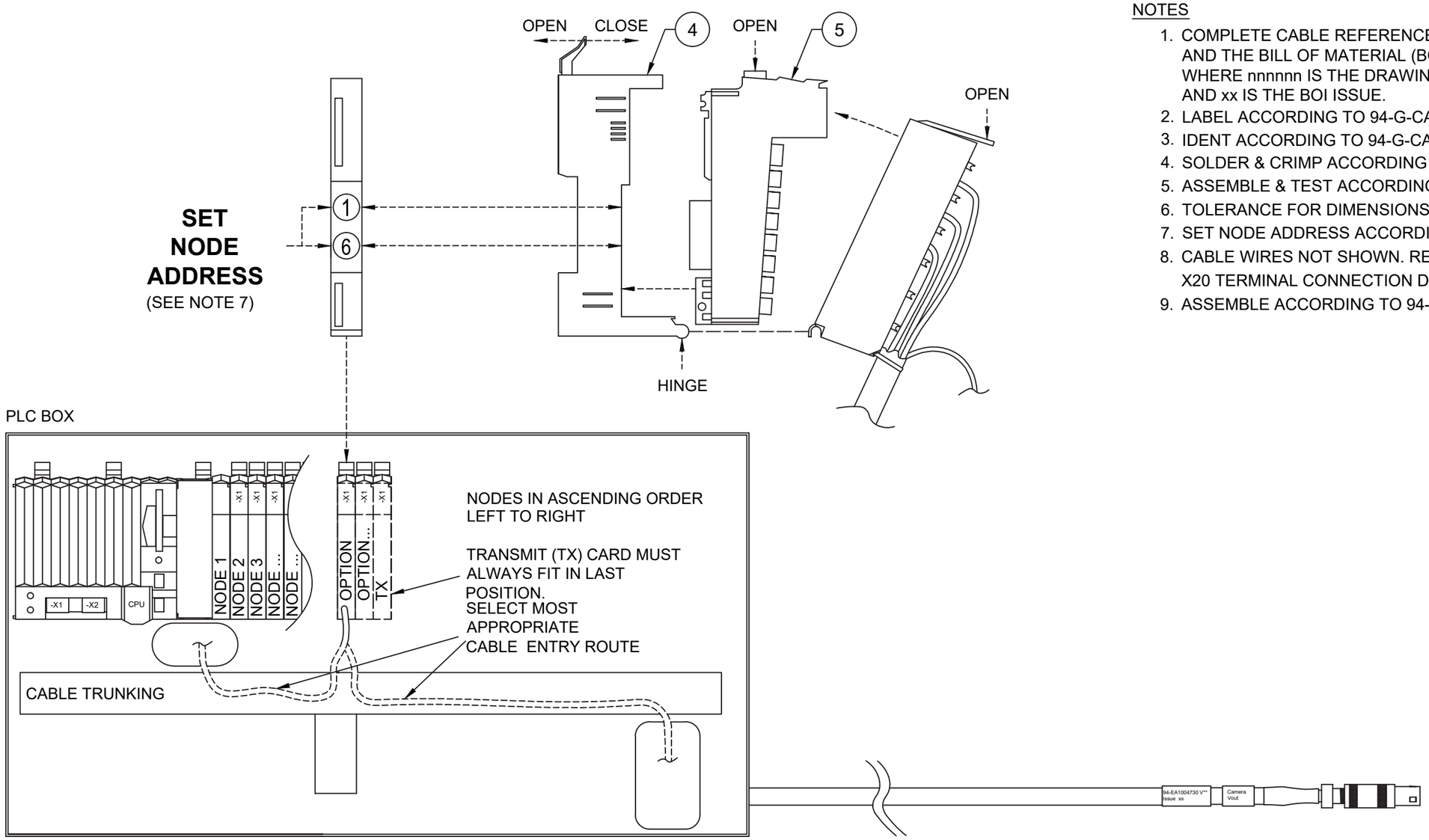

NOTES

1. COMPLETE CABLE REFERENCE TO SUIT ASSEMBLY VERSION AND THE BILL OF MATERIAL (BOI) ISSUE. e.g. nnnnnnV** ISSxx. WHERE nnnnnn IS THE DRAWING No., ** IS THE VERSION AND xx IS THE BOI ISSUE.
2. LABEL ACCORDING TO 94-G-CA41387
3. IDENT ACCORDING TO 94-G-CA41386
4. SOLDER & CRIMP ACCORDING TO 94-G-CA41385
5. ASSEMBLE & TEST ACCORDING TO 94-G-CA41388
6. TOLERANCE FOR DIMENSIONS +5%-0%
7. SET NODE ADDRESS ACCORDING TO 94-G-ED44432
8. CABLE WIRES NOT SHOWN. REFER TO CIRCUIT DIAGRAM FOR X20 TERMINAL CONNECTION DETAILS.
9. ASSEMBLE ACCORDING TO 94-G-ED44183

Issue	Date	ECN	Modification	Zone	Drawn	Checked
4						
3						
2						

TOLERANCES UNLESS STATED
X ±0.5mm X.XX ±0.1mm
X.X ±0.3mm ANGLE ±0° 15'

SCALE NTS UNLESS STATED
DIMS mm UNLESS STATED

ALL ENQUIRIES :- ptdesign@oxinst.com

THIRD ANGLE PROJECTION

THIS DRAWING BELONGS TO OXFORD INSTRUMENTS PLASMA TECHNOLOGY Ltd. AND IS ISSUED ON CONDITION THAT IT IS NOT COPIED, PRINTED OR DISCLOSED EITHER WHOLLY OR IN PART TO A THIRD PARTY WITHOUT PRIOR CONSENT IN WRITING FROM OXFORD INSTRUMENTS PLASMA TECHNOLOGY Ltd. NORTH END, YATTON, BRISTOL. BS49 4AP. ENGLAND

OXFORD INSTRUMENTS

PLASMA TECHNOLOGY

TITLE
LEP PLC OPTION KIT

LEM G50 / SOPHIE FLD205A)

DRAWING No. 94-EA1004730

DRAWN	CHECKED	DATE	ISSUE
RDE	DJW	13/08/2013	1

SHEET 1 OF 2